Product bill of material				
Serial number	material name	Masterial number	NO.	Describe
①	4-2315-A	94.04.2315.000	1	Material:T=1.0mm 1090AL
②	020249	97.76.249.00	1	Material:T=0.6mm SUS304

table for unmentioned tolerance in the drawing (unit: mm)			punch angle tolerance in the drawing (unit:degree)		
0-5	5-30	30-120	0-10	10-50	50-120
±0.15	±0.2	±0.5	±1°	±0.5°	±0.3°
120-250	250-400	400-700	120-250	250-360	360 above
±0.8	±1.5	±2	±0.2°	±0.166°	±0.083°

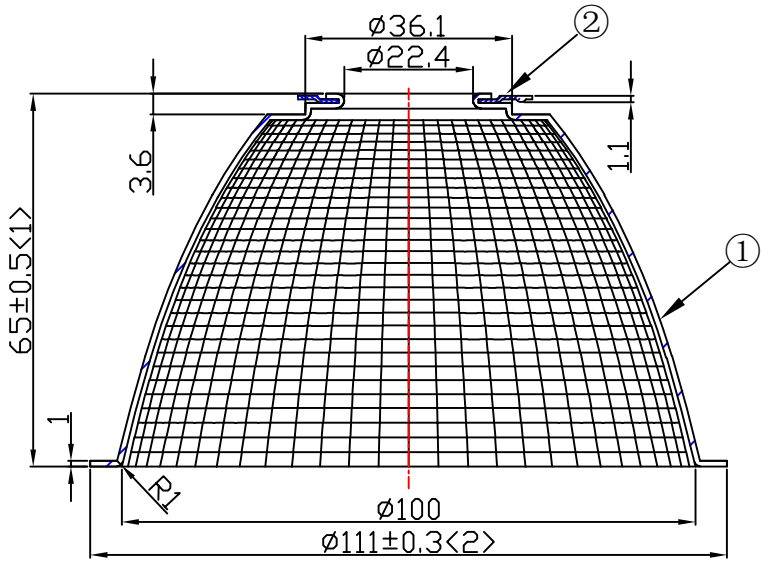

A-A

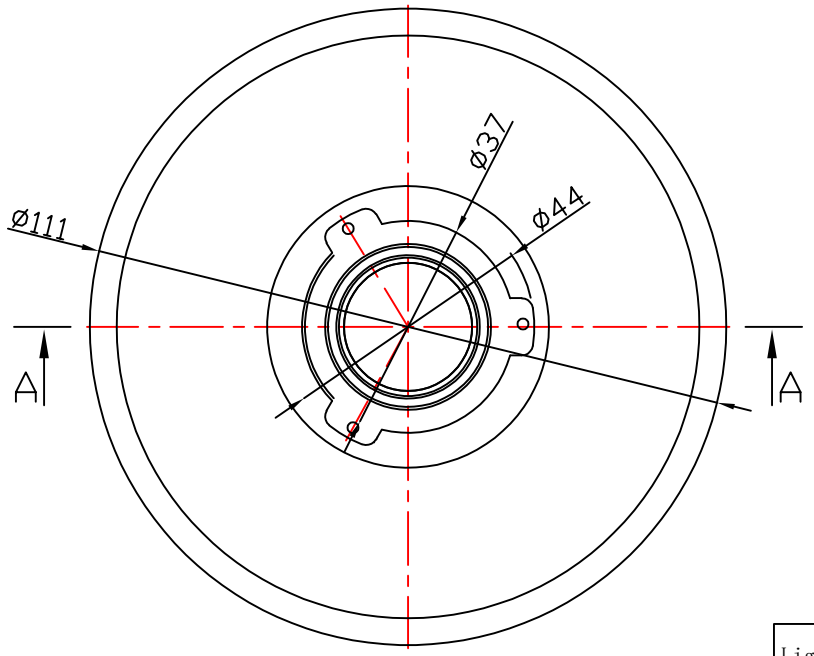

Light Source	XICATO XTM 19MM
Plastic Holder	
Metal Adaptar	
Design Angle	24±3°
Measured Angle	22.1°

Nata®
NATA Lighting Co.,Ltd

Mark	Amended Times	Amended Content		Signature	Amended Date
Controll Version		A2	Design Version	K0	Client Version
Designer			Drawing by		Proportion 1:1
Technology			Auditor		View
Approval			Date	2018.03.05	Page Total_ Page_

Customer Item	
Customer Code	NT
Product Number	
Product Name	4-1983-M